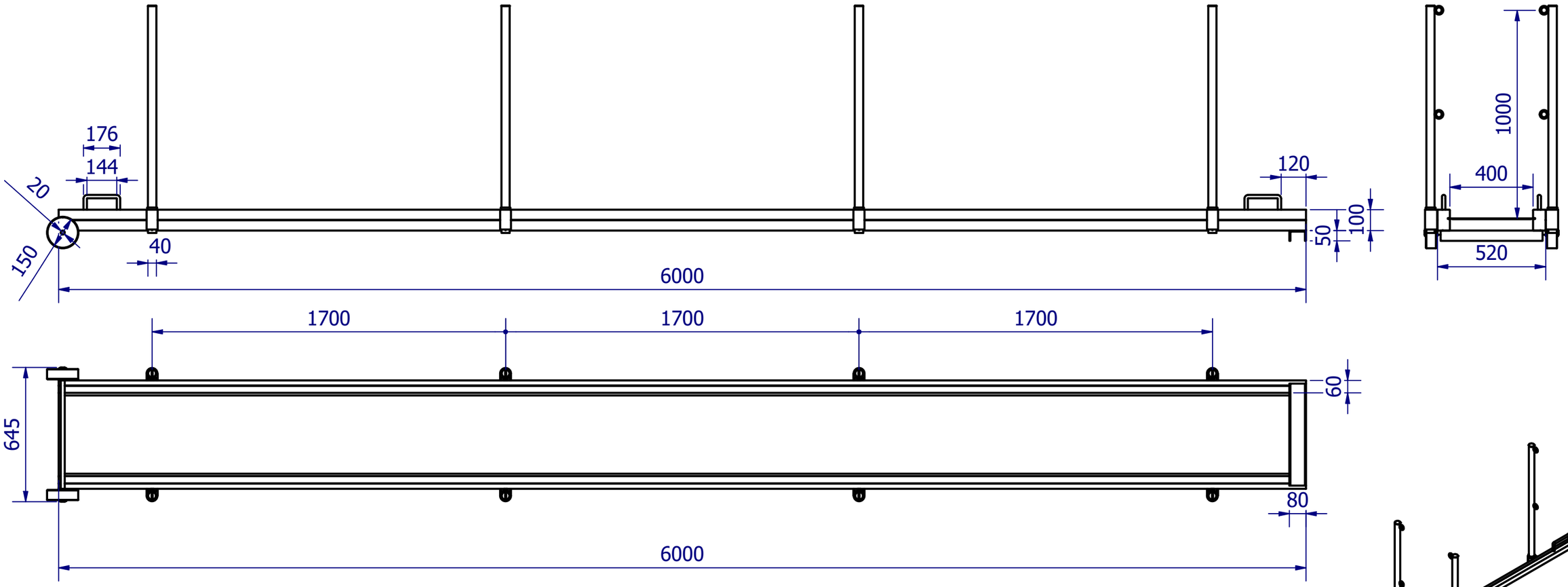

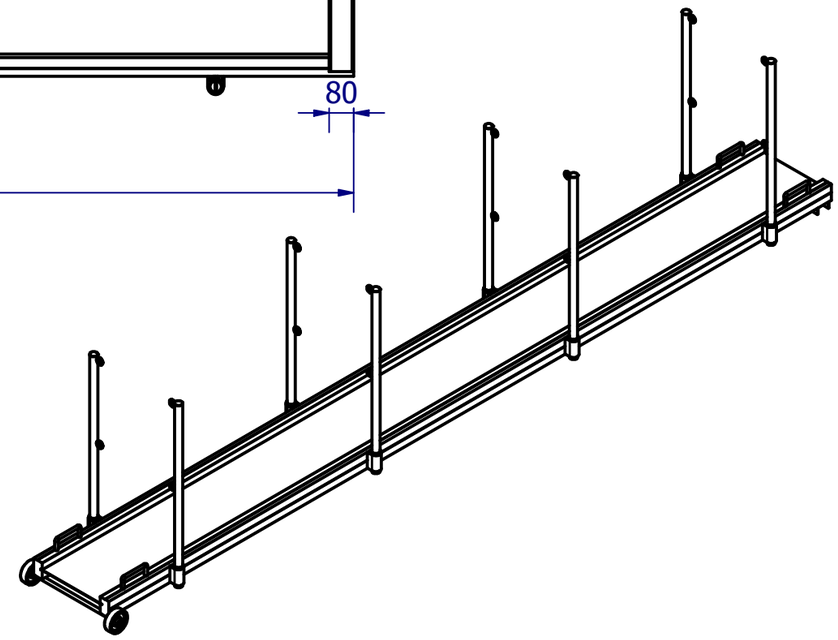

GENERAL NOTES:
General tolerance according to DIN ISO 2768-1 (C)

GANGWAY INFORMATION

STANDARD:	EN-NEN526
LENGTH:	6000 MM
WIDTH:	400 MM
SWL:	200 KG
MAX ANGLE:	30°
MATERIAL:	AW 6060/6082
WEIGHT:	±70 kg

PART NUMBER: FA - NEN526 - 6000X400 mm	REV: 2	PROJECTION
	DATE: 14-11-2020	
CLIENT:	DRAWN: T.H.	SCALE: 1 : 20
PROJECT:	CHECK:	SIZE: A3
DESCRIPTION: Stanchions on both sides	STATUS: FA	SHEET: 1 OF 1